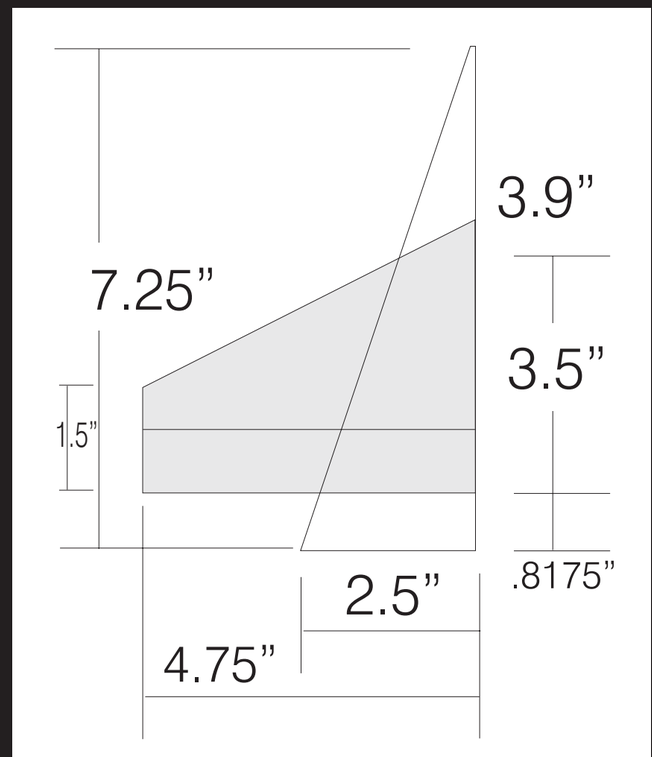

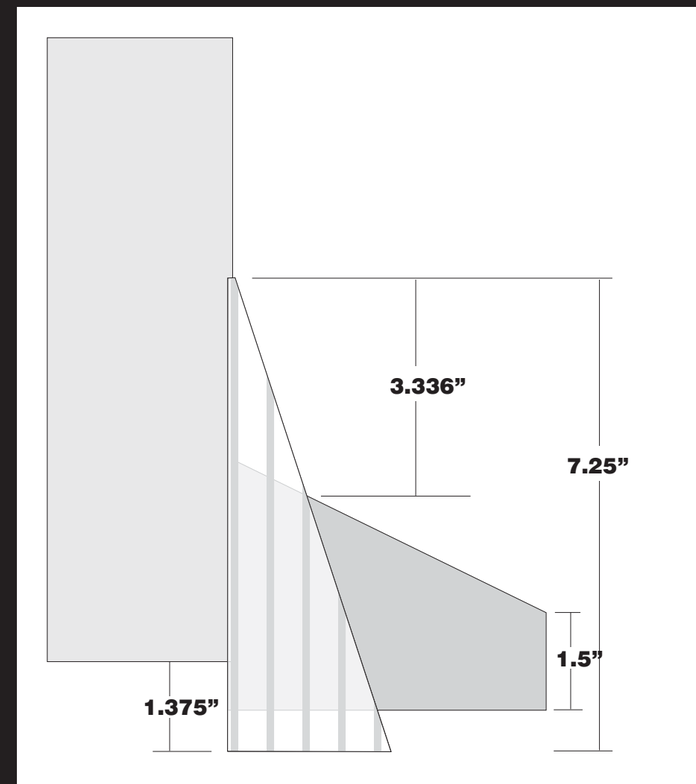

Many thanks to John Pursley for his invaluable help with the fairings.
www.accur8.com/Modeling_Apollo/S-IC_Fairing/S-IC_Fairing.htm

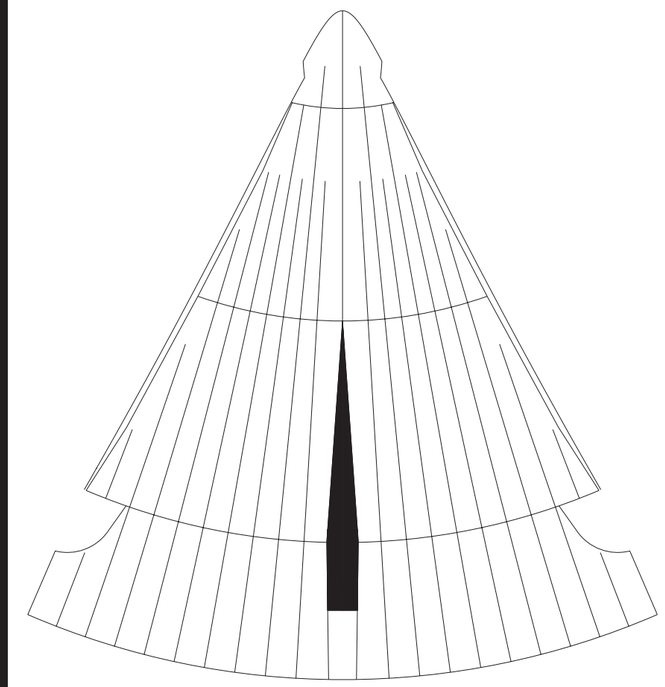

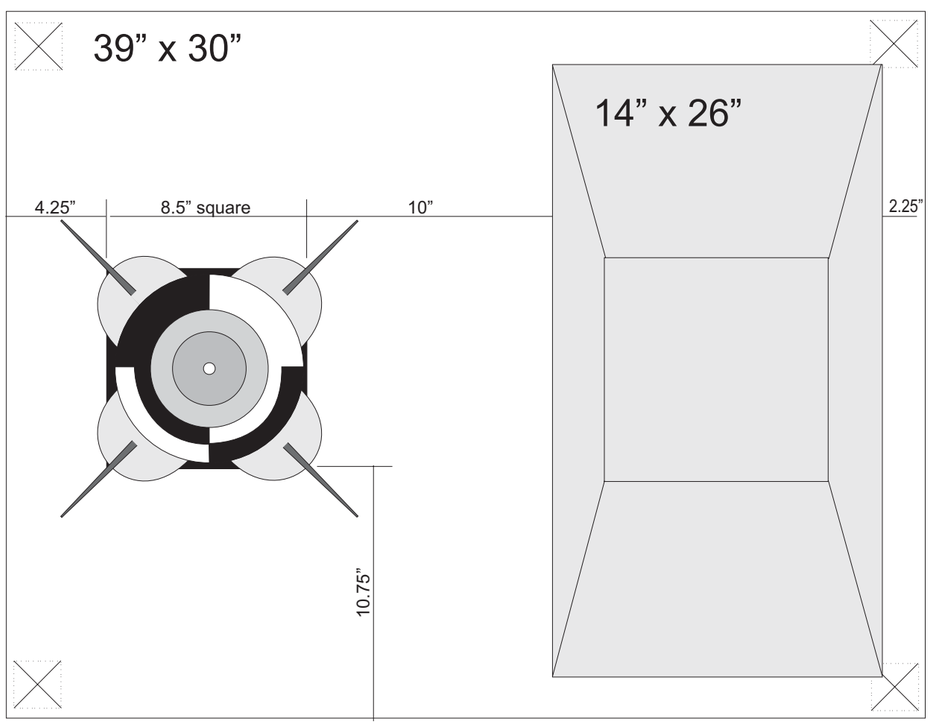

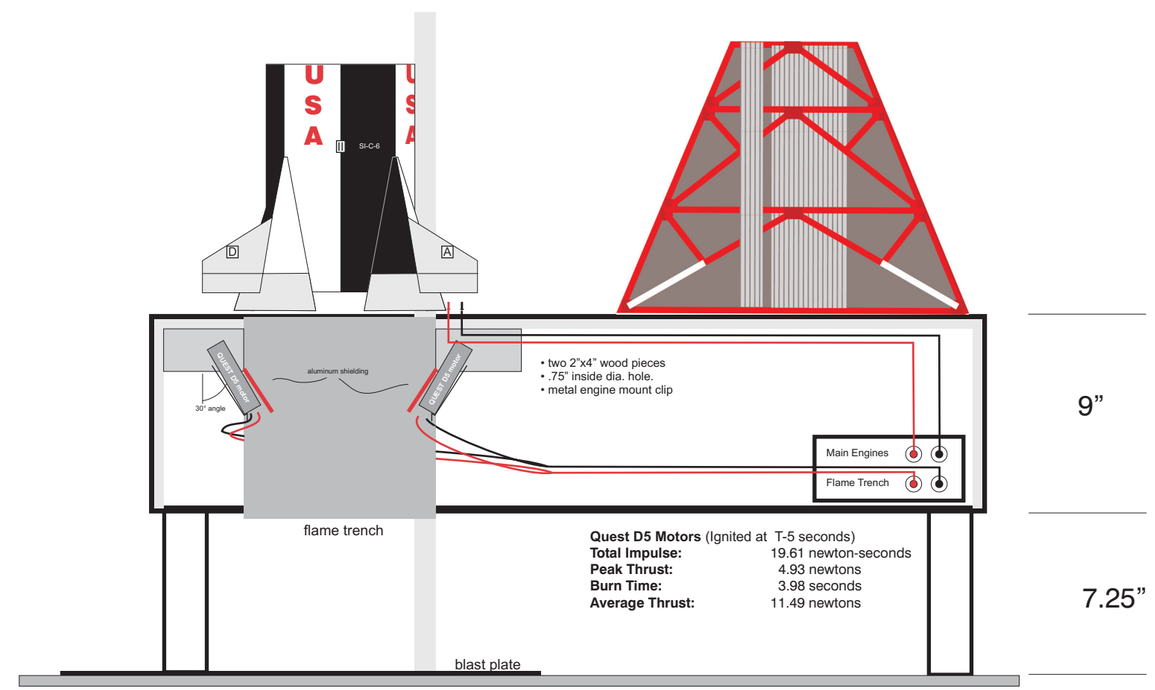

Quest D5 Motors (Ignited at T-5 seconds)

Total Impulse:	19.61 newton-seconds
Peak Thrust:	4.93 newtons
Burn Time:	3.98 seconds
Average Thrust:	11.49 newtons